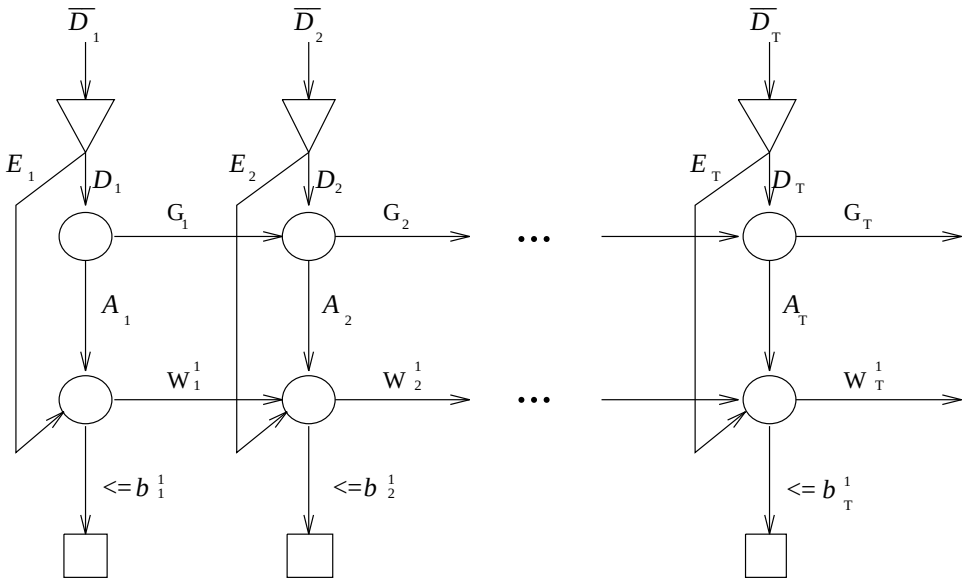
$\overline{D}_1$
$\overline{D}_2$
$\overline{D}_T$
E_1
D_1
E_2
D_2
E_T
D_T
G_1
G_2
G_T
A_1
A_2
A_T
W_1^1
W_2^1
W_T^1
$<= b_1^1$
$<= b_2^1$
$<= b_T^1$